CE

I	LAVASTOVIGLIE INDUSTRIALI
F	LAVE-VAISSELLE INDUSTRIELS
GB	INDUSTRIAL DISHWASHER
D	INDUSTRIEGESCHIRRSPÜLER
ES	LAVAVAJILLAS INDUSTRIALES

4ZIP.RU

E 1000

SILANOS®
LAVASTOVIGLIE INDUSTRIALI

MANUALE PARTI DI RICAMBIO
CATALOGUES PIÉCES DETACHEES
SPARE PARTS MANUAL
ERSATZTEILEKATALOG
MANUAL PARTES DE REPUESTOS

Rev. 12-2005 Cod. 201325

E1000

REV. 12/2005 | ED. 04/2005 | **TAV. 1**

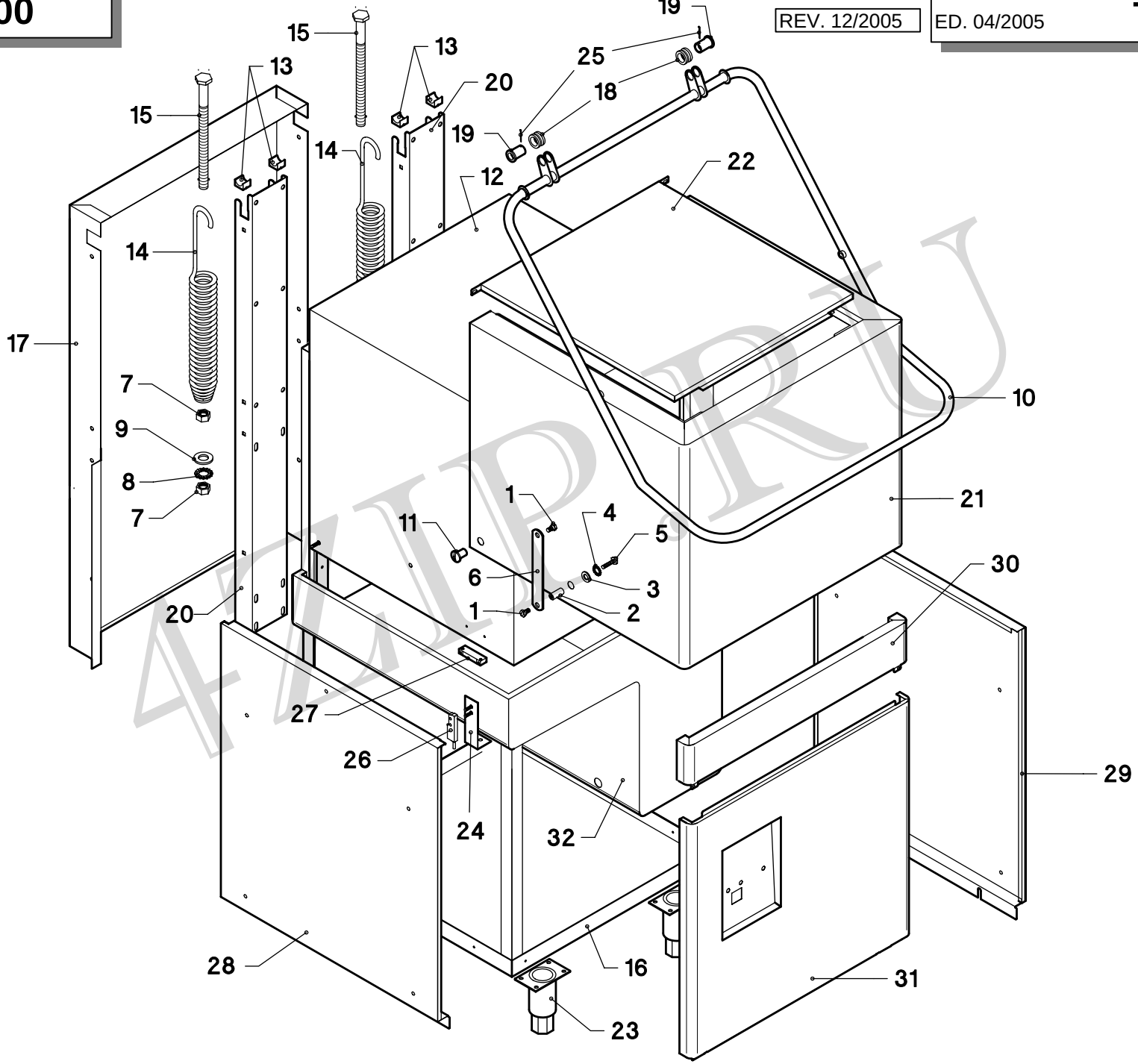

4ZIPRU

E1000

REV. 12/2005 | ED. 04/2005 | **TAV. 1**

Pos.	COD.	Q.tà	DESCRIZIONE	DENOMINATION	DESCRIPTION	BEZEICHNUNG	DESCRIPCIÓN
1	904771	4	PERNO SNODO	PIVOT A GENOU	JOINT PIN	GELENKBOLZEN	PERNO
2	900514	2	BUSSOLA PER SNODO	DOUILLE	BEARING	BUCHSE	BRÚJULA
3	906050	2	RONDELLA PIANA	RONDELLE	WASHER	UNTERLEGSCHEIBE	ARANDELA
4	905940	2	RONDELLA GROWER Ø8	RONDELLE	WASHER	UNTERLEGSCHEIBE	ARANDELA GROWER
5	907820	2	VITE M8X12	VIS	SCREW	SCHRAUBE	TORNILLO
6	904930	2	PIASTRINA	PLAQUETTE	PLATE	PLATTEKEN	PLACA
7	902022	4	DADO M10	ECROU	NUT	MUTTER	TUERCA
8	905941	2	RONDELLA GROWER Ø10	RONDELLE	WASHER	UNTERLEGSCHEIBE	ARANDELA GROWER
9	906055	2	RONDELLA PIANA Ø10	RONDELLE	WASHER	UNTERLEGSCHEIBE	ARANDELA
10	903903	1	MANIGLIIONE	POIGNEE	HANDLE	HANDRIFF	MANIJA
11	907785	2	VITE INOX M6 FEMMINA	VIS FEMELLE	FEMALE SCREW	WEIBLICHE SCHRAUBE	TORNILLO FEMENINO
12	901829	1	CAPOTE	CAPOTE	HOOD	GEHAUSE	CAPOTE
13	900311	4	BOCCOLA MANIGLIONE	BOUCLE	BUSH	BESCHLAG	BOCOLA
14	904137	2	MOLLA SOLLEV. CAPOTE	RESSORT	SPRING	FEDER	RESORTE
15	907222	2	TIRANTE MOLLA	TIRANT	CONNECTING ROD	ZUGSTAB	VARILLA RESORTE
16	900302	1	BASAMENTO	SOCLE	BASE	UNTERSTRUKTUR	BASE
17	908672	1	PANNELLO POSTERIORE	PANNEAU POSTERIEUR	BACK PANEL	HINTERE VERKLEIDUNG	PANEL POSTERIOR
18	906066	2	ROTELLA SUPPORTO MOLLA	GALET PIVOTANT	SMALL WHELL	RADCHEN	RUEDA DE SOPORTE RESORTE
19	904796	2	PERNO ROTELLA	PIVOT D'ACCROCHAGE	HOOKING PIN	KUPPLUNGSBOLZEN	PERNO
20	908126	2	LONGHERONE DX-SX	LONGERON	BACK STAY	LANGSTRAGER	LARGUERO DX-SX
21	900985	1	COPERTURA CAPOTE	COUVERCLE CAPOTE	HOOD COVER	GEHASE DECKEL	COBERTURA CAPOT
22	901821	1	PANNELLO SUPERIORE	PANNEAU SUPERIEUR	UPPER SIDE PANEL	OBERE VERKLEIDUNG	PANEL SUPERIOR
23	TR0860	4	PIEDINO REGOLABILE	PETIT PIED RÉGABLE	RUBBER LEG	EINSTELLBARESOCKEL	PIÉ REGULABLE
24	906385	1	SQUADRETTA	PALIER	BEARING	TRÄGE	ANGULAR
25	907773	2	COPIGLIA 2x30	COUPILLE	SPLIT PIN	SPLINT	CLAVIJA
26	TR0666	1	REED MAGNETICO	REED	REED	REED	REED MAGNÉTICO
27	TR0220	1	MAGNETE	MAGNÉTO	MAGNET	MAGNET	IMÁN
28	904449	1	PANNELLO LATERALE SX	PANNEAU GAUCHE	LEFT PANEL	LINKE VERKLEIDUNG	PANEL IZQUIERDO LATERAL
29	904447	1	PANNELLO LATERALE DX	PANNEAU DROITE	RIGHT PANEL	RECHTE VERKLEIDUNG	PANEL DERECHO LATERAL
30	901822	1	PANNELLO FRONTALE	PANNEAU FRONTAL	FRONT PANEL	FRONT VERKLEIDUNG	PANEL FRONTAL
31	908647	1	PANNELLO COMANDI	TABLEAU COMMANDE	ELECTRIC PANEL	SCHALTTAFEL	PANEL DE COMANDO
32	908572	1	VASCA	BASSIN	TANK	WANNE	BATEA

AZIP.RU

E1000

REV. 12/2005 ED. 04/2005 **TAV. 2**

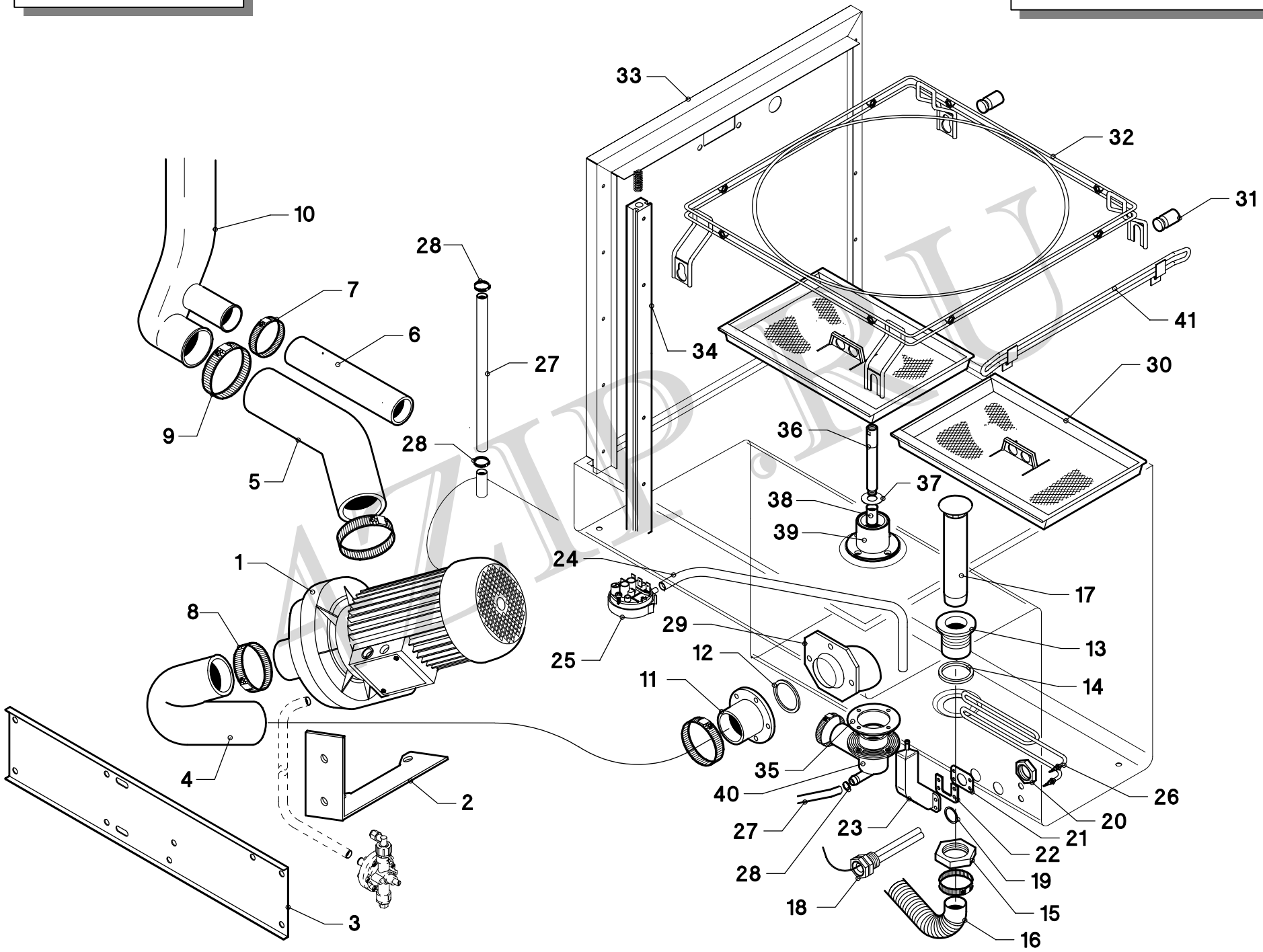

AZIP.RU

E1000

REV. 12/2005 | ED. 04/2005 | **TAV. 2**

Pos.	COD.	Q.tà	DESCRIZIONE	DENOMINATION	DESCRIPTION	BEZEICHNUNG	DESCRIPCIÓN
1	902293	1	POMPA	POMPE	PUMP	PUMPE	BOMBA
2	908519	1	SUPPORTO POMPA	SUPPORT POMPE	PUMP SUPPORT	PUMPE TRÄGER	SOPORTE BOMBA
3	958484	1	TRAVERSA SUPP. POMPA	SUPPORT POMPE	PUMP SUPPORT	PUMPE TRÄGER	SOPORTE BOMBA
4	908711	1	MANICOTTO ASPIRAZIONE	MANCHON D'ASPIRATION	INLET ELBOW	ANSAUGMUFFE	PALANCA DE ASPIRACIÓN
5	908710	1	TUBO MANDATA	MANCHON DE REFAULEM.	OUTLET ELBOW	AUSLAMUFFE	PALANCA DE MANDO
6	908709	1	TUBO MANDATA LAVAGGIO INFER.	TUYAU DE LAVAGE INF.	LOWER WASHING PIPE	UNTERER SPÜLUNG SAÜLE	TUBO LAVADO INFERIOR
7	902441	4	FASCETTA Ø 38÷50	COLLIER	CLAMP	SCHELLE	ABRAZADERA
8	902490	2	FASCETTA Ø 58÷75	COLLIER	CLAMP	SCHELLE	ABRAZADERA
9	902480	2	FASCETTA Ø 44÷56	COLLIER	CLAMP	SCHELLE	ABRAZADERA
10	908747	1	COLONNA LAVAGGIO	COLONNE DE LAVAGE	WASHING PIPE	SPÜLUNG SAÜLE	COLUMNA LAVADO
11	901653	1	RACCORDO ASPIRAZIONE	RACCORD D'ASPIRATION	INTAKE PIPE FITTING	ANSAUGANSCHLUSSE	EMPALME DE ASPIRACIÓN
12	904395	1	O-RING	O-RING	O-RING	O-RING	O-RING
13	905450	1	RACCORDO SCARICO	RACCORD DÉCHARGÉ	PIPE FITTING FOR OUTLET	ABLAUFANSCHLUSS	EMPALME DESAGOTE
14	904380	1	O-RING	O-RING	O-RING	O-RING	O-RING
15	902080	1	GHIERA 1'' ¼ GAS	VIROLE	LOCK-NUT	NUT MUTTER	ABRAZADERA
16	907451	1	TUBO DI SCARICO	TUYAU DE DÉCHARGÉ	OUTLET HOSE	ABLAUFSCHLAUCH	TUBO DESAGOTE
17	907337	1	TROPPO PIENO	NIVEAU	OVER FLOW	VEBERLAUF	DAMISIADO LLENO
18	TR0298	1	PORTABULBO	SIEGE DE BULBE	SEATING BULB	KUGEL SITZ	PORTABULBO
19	903250	1	GUARNIZIONE 1/2" GAS	JOINT	GASKET	DICHTUNG	GUARNICIÓN
20	902061	1	GHIERA 1/2" GAS	VIROLE	LOCK NUT	NUT MUTTER	ABRAZADERA
21	903261	1	GUARNIZIONE TRAPPOLA ARIA	JOINT RESERVOIR AIR	AIR TRAP GASKET	DICHTUNG LUFTFALLE	GUARNICIÓN TRAMPA DEL AIRE
22	907926	1	PIASTRINA TRAPPOLA ARIA	PLAQUETTE RESERVOIR AIR	AIR TRAP LINK	GLIED LUFTFALLE	PLANCHA TRAMPA DEL AIRE
23	907254	1	TRAPPOLA ARIA	RESERVOIR AIR	AIR TRAP	LUFTFALLE	TRAMPA DEL AIRE
24	907279	1	TUB0 PRESSOSTATO	TUYAU PRESSOSTAT	PRESSURE SWITCH PIPE	SCHLAUCH	TUBO PRESÓSTATO
25	905288	1	PRESSOSTATO	PRESSOSTAT	PRESSURE SWITCH	DRUCHWAECHTE	PRESOSTATO
26	905748	1	RESISTENZA 3000W	RESISTANCE	HEATING ELEMENT	HEIZKÖRPER	RESISTENCIA
27	907295	2	TUBO GOMMA 12 x 19,5	TUYAU EN CAOUTCHOUC	RUBBER HOSE	GUMMISCHLAUCH	TUBO GOMA
28	902440	3	FASCETTA Ø 13÷20	COLLIER	CLAMP	SCHELLE	ABRAZADERA
29	TR0977	1	RACCORDO ASPIRAZIONE	RACCORD D'ASPIRATION	INTAKE PIPE FITTING	ANSAUGANSCHLUSSE	EMPALME DE ASPIRACIÓN
30	902633	2	FILTRO SUPERFICIE INOX	FILTRE INOX	FILTER INOX	FILTER INOX	FILTRO EN SUPERFICIE INOX
31	903444	4	PERNO BLOCCA CESTELLO	PIVOT PANIER	BASKET PIVOT	KORB-ZAPFEN	PIVOTE CESTA
32	901679	1	TELAIO PORTACESTELLI	CHASSIS PORTE PANIER	TRACK	FÜHRUNG	BASTIDOR
33	908518	1	SCHIENALE	STRUCURE POSTERIEUR	BACK FRAME WORK	GEFÜGE	RESPALDO
34	901685	2	GUIDA SCORRIMENTO	GUIDE D'ECOULEMENT	SLIDING RAIL	FÜHRUNG	GUIA DESLIZAMIENTO
35	908141	1	GUARNIZIONE	JOINT	GASKET	DICHTUNG	GUARNICIÓN
36	908734	1	PERNO RISCIACQUO INFERIORE	TOURILLON DE RINÇAGE INFER.	INFERIOR RINSE PIN	UNTERSPÜLLSTIFT	PERNO ENJUAGUE INFERIOR
37	906004	1	RONDELLA	RONDELLE	WASHER	UNTERLEGSCHEIBE	ARANDELA
38	908456	1	BOCCOLA RIDUZIONE	RÉDUCTION	REDUCTION BUSH	VERKLEINERUNG	REDUCCIÓN
39	905388	1	RACCORDO INFER. LAVAGGIO	RACCORD DE LAVAGE INFER.	WASHING INFER. PIPE FITTING	UNTERANSCHLUSS WASCHEN	EMPALME INFER. DE LAVADO
40	905449	1	MOZZO LAVAGGIO/RISCIACQUO	MOYEU DE LAVAGE/RINÇAGE	WASHING/RINSE HUB	SPÜLUNG/NASCHSPÜLUNG NABE	BUJE DE LAVADO/ENJUAGUE
41	901672	1	GUIDA PORTACESTELLO	COULISSE PANIER	BASKET GUIDE	KORBÜFUHRUNG	GUIA CANASTOS

ZIPRI

E1000

REV. 12/2005

ED. 04/2005

TAV. 3

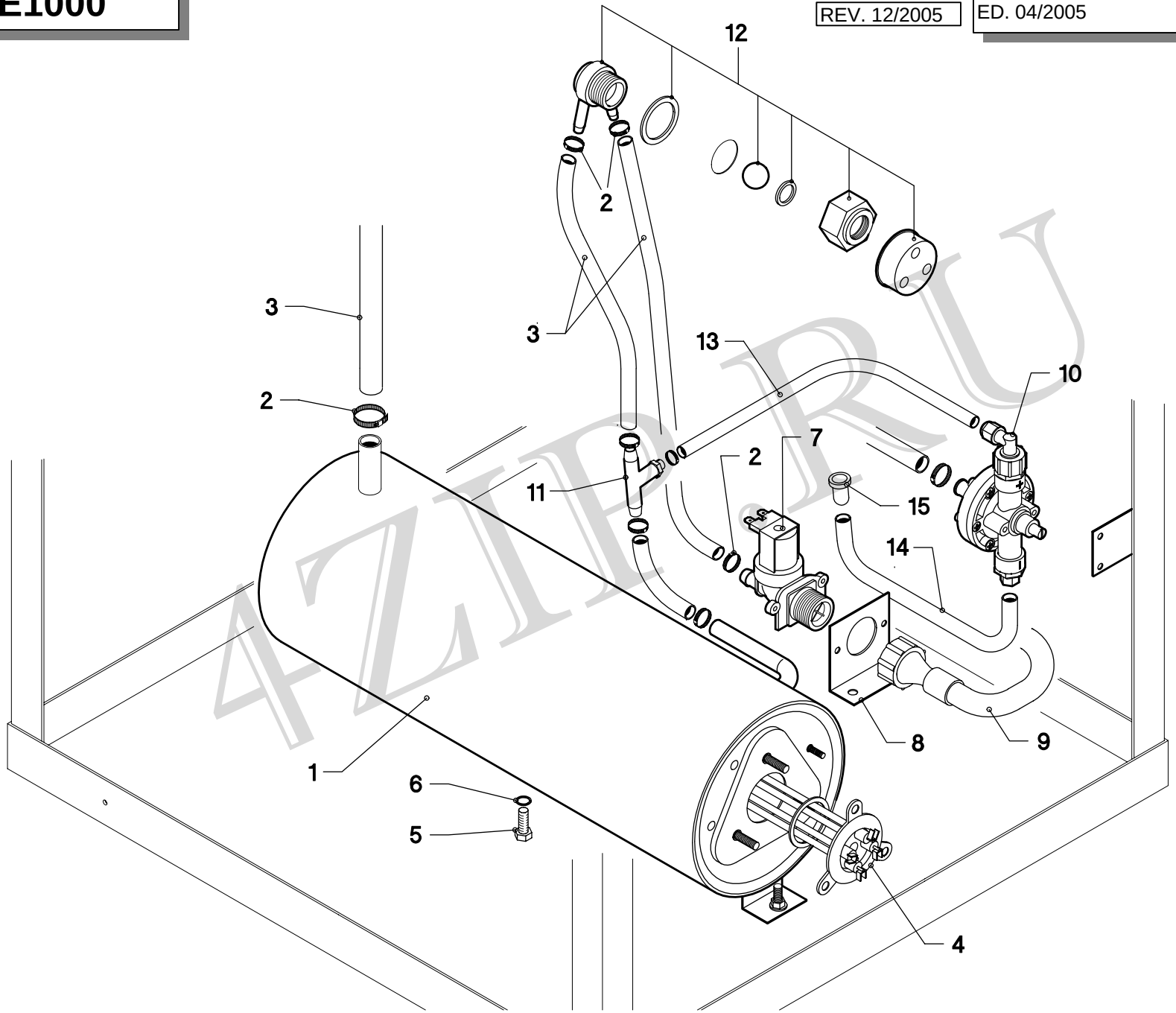

4ZIP.RU

E1000

REV. 12/2005 ED. 04/2005 **TAV. 3**

Pos.	COD.	Q.tà	DESCRIZIONE	DENOMINATION	DESCRIPTION	BEZEICHNUNG	DESCRIPCIÓN
1	900485	1	BOILER	CHAUFFE EAU	BOILER	HEISSWASSERSPEICHER	BOILER
2	902440	7	FASCETTA Ø 13÷20	COLLIER	CLAMP	SCHELLE	ABRAZADERA
3	907295	4	TUBO GOMMA 12x19,5	TUYAU EN CAOUTCHOUC	RUBBER HOSE	GUMMISCHLAUCH	TUBO GOMA
4	905570	1	RESISTENZA 6KW + O-RING	RESISTANCE + O-RING	HEATING ELEMENT + O-RING	HEIZKÖRPER + O-RING	RESISTENCIA + O-RING
5	907820	1	VITE	VIS	SCREW	SCHRAUBE	TORNILLO
6	904430	1	O-RING TAPPO BOILER	O-RING BOUCHON	O-RING PLUG	O-RING FROPFEN	O-RING TAPÓN
7	902390	1	ELETTROVALVOLA	SOUPAPE ELECTRIQUE	ELECTRIC VALVE	ELEKTROVENTIL	VALVULA ELETRICA
8	906365	1	SUPPORTO ELETTROVALVOLA	PALIER SOUPAPE ELECTRIQUE	BEARING ELECTRIC VALVE	TRÄGE ELEKTROVENTIL	SOPORTO VALVULA ELETRICA
9	907345	1	TUBO CARICO ACQUA	TUYAN D'ENTREÉ DE L'EAU	INLET PIPE	WASSERZUFÜHRROHR	TUBO
10	902018	1	DOSATORE POMPA	DOSEUR POMPE	PUMP DOSING DEVICE	DOSIERSATZ PUMPE	DOSIFICADOR BOMBA
11	905408	1	RACCORDO A 3 VIE	RACCORD	PIPE FITTING	ANSCHLUSSE	EMPALME
12	TR2433	1	VALVOLA ANTIRIFLUSSO	VALVE	VALVE	VENTIL	VALVULA
13	907279	1	TUBO 4 x 7	TUYAU	PIPE	SCHLAUCH	TUBO
14	907278	1	TUBO 4 x 7	TUYAU	PIPE	SCHLAUCH	TUBO
15	902568	1	FILTRO DOSATORE	FILTRE DOSEUR	FILTER FOR DOSING	FILTER	FILTRO DOSIFICADOR

4ZIP.RU

TAV. 4

ED. 04/2005

REV. 12/2005

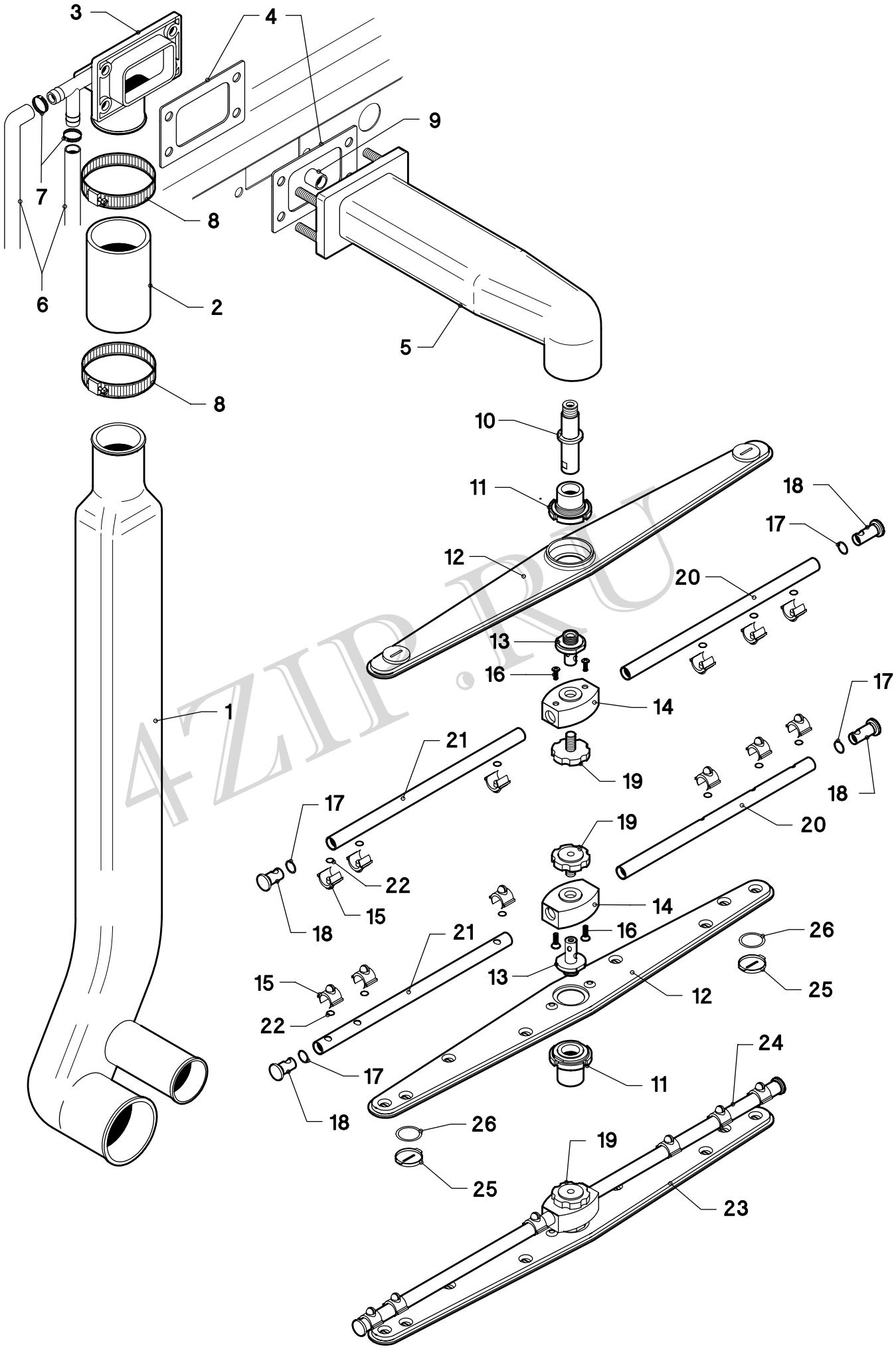

4ZIP.RU

E1000

E1000

REV. 12/2005 | ED. 04/2005 | **TAV. 4**

Pos.	COD.	Q.tà	DESCRIZIONE	DENOMINATION	DESCRIPTION	BEZEICHNUNG	DESCRIPCIÓN
1	908747	1	COLONNA LAVAGGIO	COLONNE DE LAVAGE	WASHING PIPE	SPÜLÜNG SAÜLE	COLUMNA LAVADO
2	903705	1	MANICOTTO	MANCHON	ELBOW	MUFFE	PALANCA
3	908745	1	RACCORDO BRACCIO	RACCORD	PIPE FITTING	ANSCHLUSSE	EMPALME
4	903413	2	GUARNIZIONE COLONNA LAVAGGIO	JOINT COLONNE DE LAVAGE	WASHING PIPE GASKET	SPÜLÜNG SAÜLE DICHTUNG	GUARNICIÓN COLUMNA LAVADO
5	908743	1	BRACCIO LAVAGGIO	BRAS DE LAVAGE	WASHING ARM	WASCHLAUFRAD	BRAZO LAVADO
6	907295	2	TUBO GOMMA 12 x 19,5	TUYAU EN CAOUTCHOUC	RUBBER HOSE	GUMMISCHLAUCH	TUBO GOMA
7	902440	2	FASCETTA Ø 13÷20	COLLIER	CLAMP	SCHELLE	ABRAZADERA
8	902480	2	FASCETTA Ø 44÷56	COLLIER	CLAMP	SCHELLE	ABRAZADERA
9	903379	1	GUARNIZIONE	JOINT	GASKET	DICHTUNG	GUARNICIÓN
10	904765	1	PERNO RISCIASCQUO SUPERIORE	TOURILLON DE RINÇAGE SUPER.	UPPER RINSE PIN	OBERER SPÜLLSTIFT	PERNO ENJUAGUE SUPERIOR
11	904277	2	MOZZO + GHIERA	MOYEU + VIROLE	HUB + RING-NUT	NABE + KLEMMUTTER	BUJE + ABRAZADERA
12	902908	2	GIRANTE LAVAGGIO	BRAS DE LAVAGE	WASH ARM	SPÜLLARM	RODETE LAVADO
13	904760	2	PERNO GIRANTE RISC.	TOURILLON DE RINÇAGE	RINSE PIN	SPÜLLSTIFT	PERNO RODETE ENJUAGUE
14	904292	2	MOZZO GIRANTE RISC.	MOYEU	HUB	NABE	BUJE RODETE ENJUAGUE
15	902816	12	GETTO RISCIACQUO	JET DE RINÇAGE	RINSING JET	SPÜLLDUSE	CHORRO ENJUAGUE
16	907651	4	VITE TPS M 4x8	VIS	SCREW	SCHRAUBE	TORNILLO
17	904321	4	O-RING	O-RING	O-RING	O-RING	O-RING
18	906450	4	TAPPO PER BRACCIO RISC.	BOUCHON BRAS DE RINÇAGE	PLUG FOR RINSE ARM	VERSCHLUSS SPÜLLAUF	TAPÓN PARA BRAZO ENJUAGUE
19	902880	2	GHIERA BLOCCAGGIO	FRETTE DE BLOCAGE	RING-NUT	KLEMMUTTER	ABRAZADERA BLOQUEO
20	954806	2	BRACCIO RISCIACQUO DX	BRAS DE RINÇAGE DROITE	RIGHT RINSE ARM	RECHTE SPÜLLAUFRAD	BRAZO ENJUAGUE DERECHO
21	954807	2	BRACCIO RISCIACQUO SX	BRAS DE RINÇAGE GAUCHE	LEFT RINSE ARM	LINKE SPÜLLAUFRAD	BRAZO ENJUAGUE IZQUIERDO
22	904388	12	O-RING	O-RING	O-RING	O-RING	O-RING
23	903107	2	GIRANTE LAVAGGIO COMP.	BRAS DE LAVAGE COMPL.	COMPL. WASH ARM	SPÜLLARM KOMPL.	RODETE LAVADO COMPL.
24	903017	2	GIRANTE RISCIACQUO COMP.	BRAS DE RINÇAGE COMPL.	COMPL. RINSE ARM	SPÜLLSTIFT KOMPL.	RODETE ENJUAGUE COMP.
25	906445	4	TAPPO ISPEZIONE	BOUCHON	PLUG	FROPFEN	TAPÓN
26	904324	4	O-RING TAPPO ISPEZIONE	O-RING	O-RING	O-RING	O-RING

ZIP.RU

E1000

REV. 12/2005 | ED. 04/2005 | **TAV. 5**

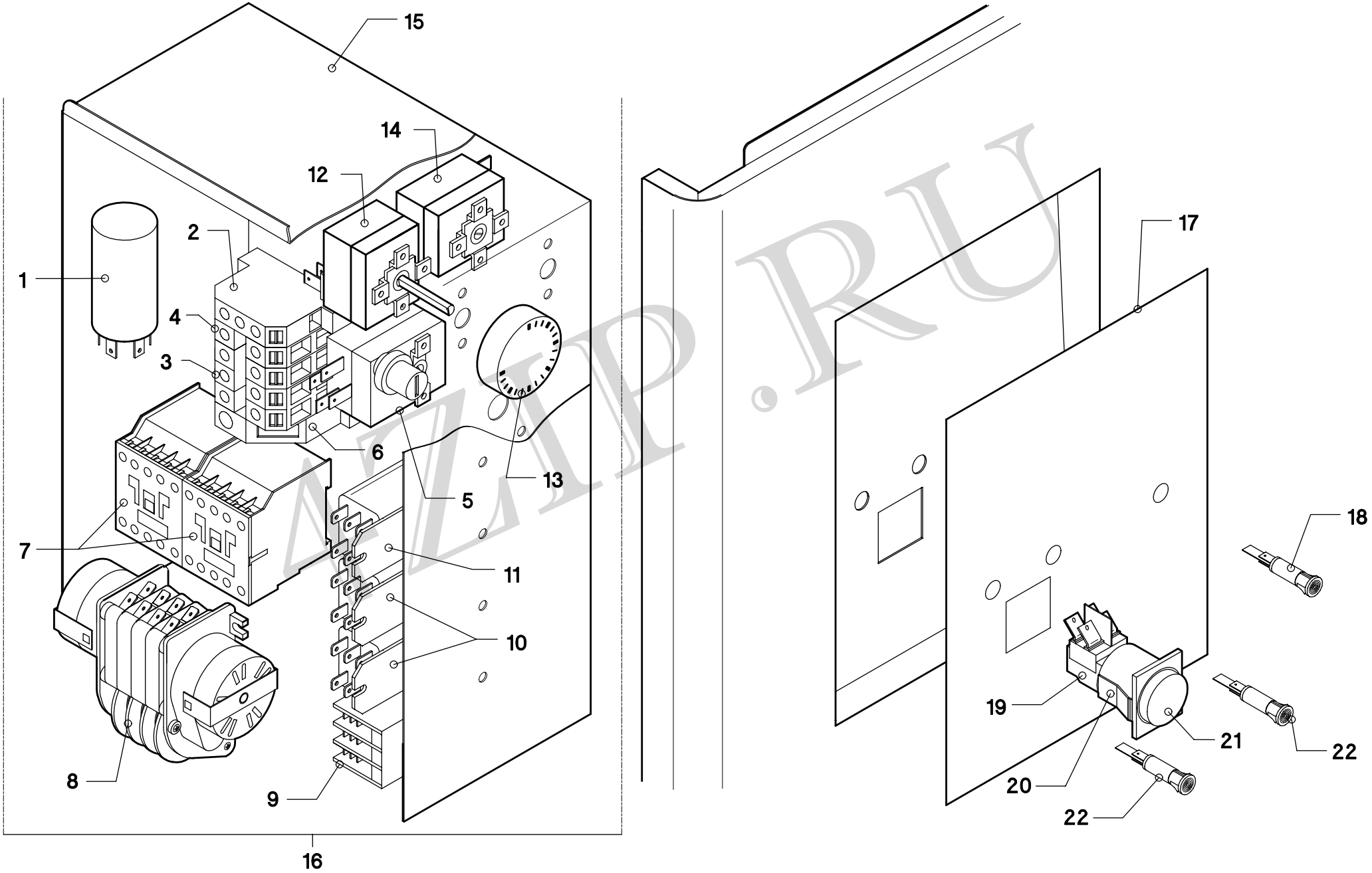

4ZIP.RU

E1000

REV. 12/2005 | ED. 04/2005 | **TAV. 5**

Pos.	COD.	Q.tà	DESCRIZIONE	DENOMINATION	DESCRIPTION	BEZEICHNUNG	DESCRIPCIÓN
1	902107	1	FILTRI ANTIDISTURBO	FILTRE ANTIDERANGEMENT	NOISE FILTER	ENTSTORFILTER	FILTROS DE RUIDOSIDAD
2	904163	1	MORSETTO TERRA	BORNE	TERMINAL	KLEMMLEISTE	GRAMPA
3	TR3178	1	MORSETTO 3P	BORNE	TERMINAL	KLEMMLEISTE	GRAMPA
4	904166	1	MORSETTO 1P	BORNE	TERMINAL	KLEMMLEISTE	GRAMPA
5	907125	1	TERMOSTATO DI SICUREZZA	THERMOSTAT	THERMOSTAT	THERMOSTAT	TERMÓSTATO DE SEGURIDAD
6	904175	1	FERMA MORSETTO	ARRÊTÉE BORNE	TERMINAL BLOCK	KLEMMENBLOCK	BLOQUE GRAMPA
7	907045	2	TELERUTTORE	TELERUPTEUR	CONTACTOR	SCHUTZ	TELERRUPTOR
8	907172	1	TIMER CICLO	TYMER CYCLE	CYCLE TYMER	ZYCLUSZEITUHR	TYMER CICLO
9	955068	4	MORSETTO PABO	BORNES	TERMINAL BOARD	KLEMMLEISTE	TABLEROS DE BORNES
10	905476	2	RELÉ	RELAIS	RELAY	RELAIS	RELÉ
11	905475	1	RELÉ	RELAIS	RELAY	RELAIS	RELÉ
12	907110	1	TERMOSTATO 0°-90°	THERMOSTAT	THERMOSTAT	THERMOSTAT	TERMÓSTATO
13	903982	1	MANOPOLA	BOUTON	KNOB	KNOPF	EMPUÑADURA
14	907120	1	TERMOSTATO 55°	THERMOSTAT	THERMOSTAT	THERMOSTAT	TERMÓSTATO
15	908752	1	CASSETTA ELETTRICA	BOITE ELECTRIQUE	CABINET	SCHALTKASTEN	CAJA ELÉCTRICA
16	900721	1	QUADRO ELETTRICO	TABLEAU ELECTRIQUE	SWITCHBOARD	SCHALTTAFEL	TABLERO ELÉCTRICO
17	907063	1	TARGA	PLAQUETTE	PLATE	SCHILD	PLACA
18	903632	1	SPIA LINEA VERDE	LAMPE DE LIGNE	LINE LAMP	KONTROLLAMPE	LUZ LÍNEA
19	905318	1	INTERRUTTORE ON/OFF	INTERRUPTEUR	SWITCH	DRUCKKNOPF	UNTERRUPTOR
20	905307	1	SUPPORTO TASTO	SUPPORT BOUTON	SUPPORT KEY	TASTEHALTER	SOPORTE TECLA
21	905305	1	TASTO	BOUTON	KEY	TASTE	TECLA
22	903629	2	LAMPADA ARANCIO	LAMPE	LAMP	KONTROLLAMPE	LÁMPARA

4ZIP.RU